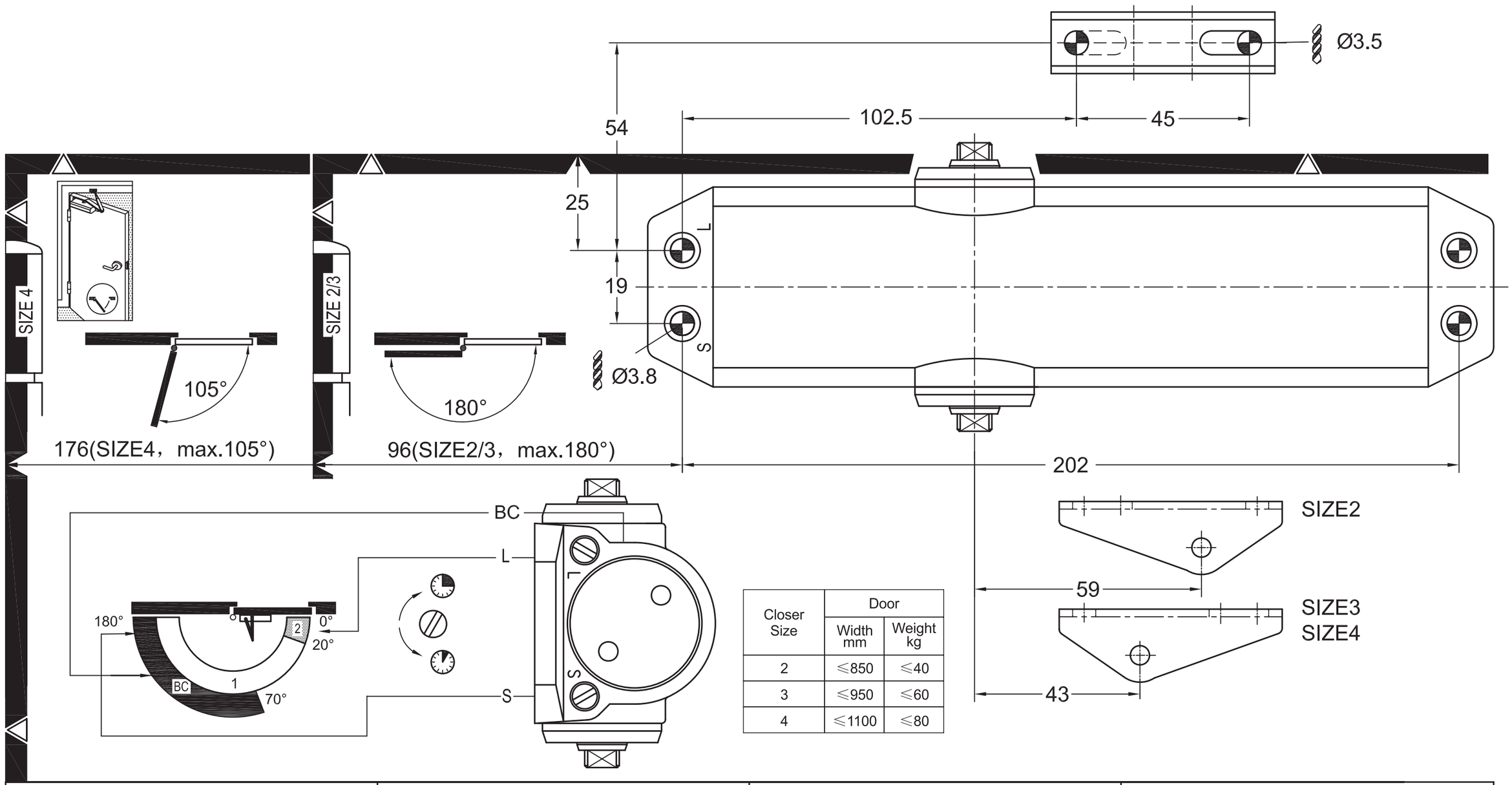

Closer Size	Door	
	Width mm	Weight kg
2	≤850	≤40
3	≤950	≤60
4	≤1100	≤80

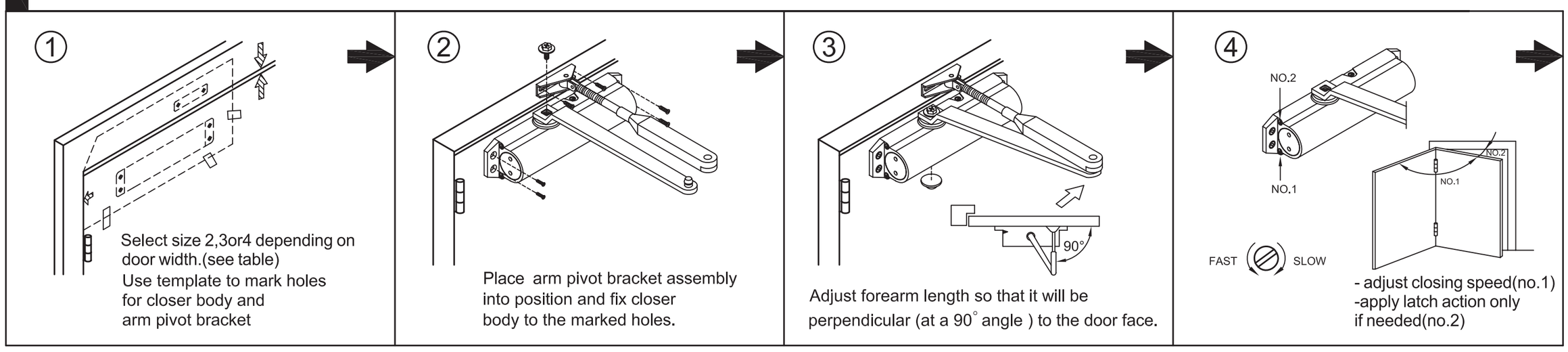

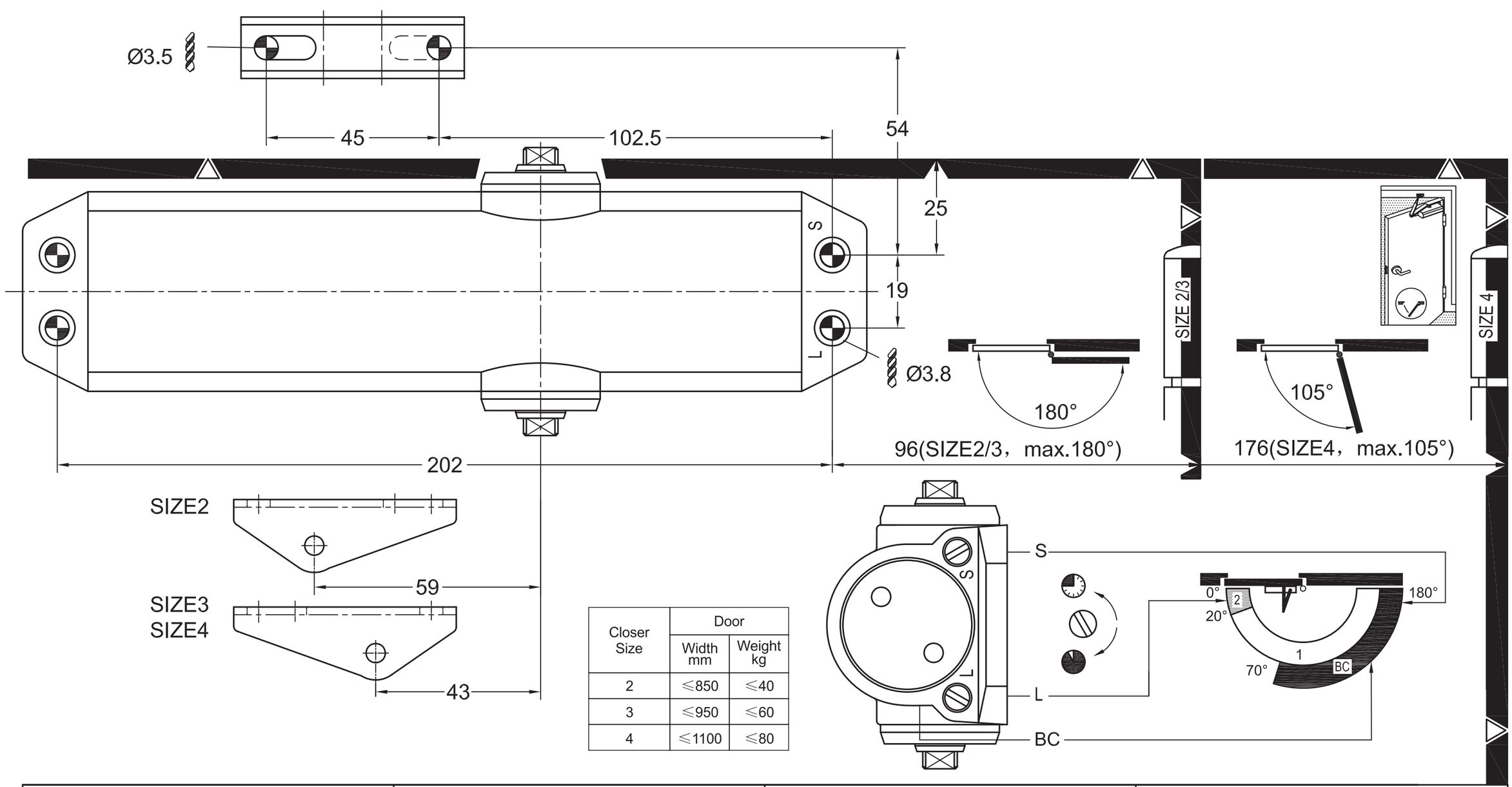
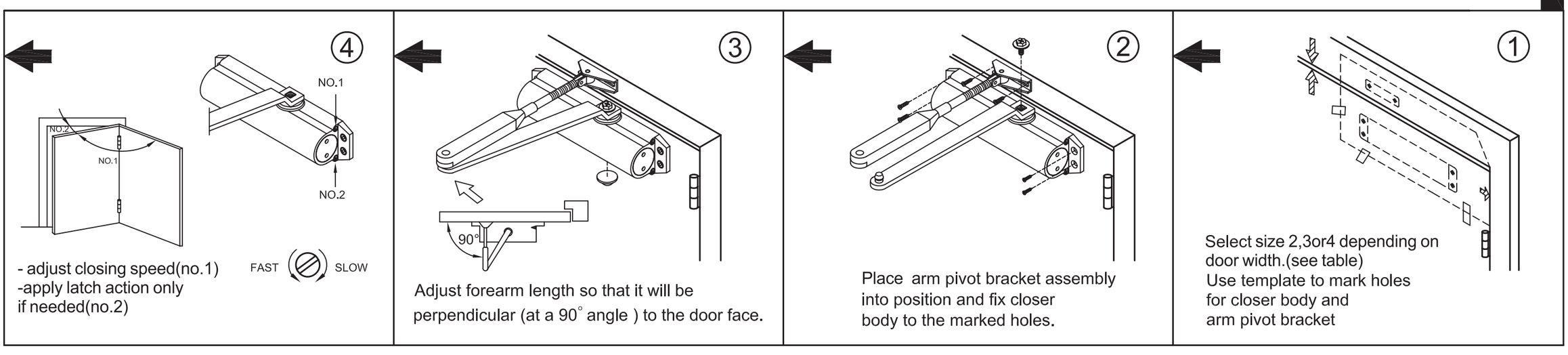
Closer Size	Door	
	Width mm	Weight kg
2	≤850	≤40
3	≤950	≤60
4	≤1100	≤80